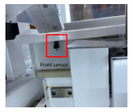

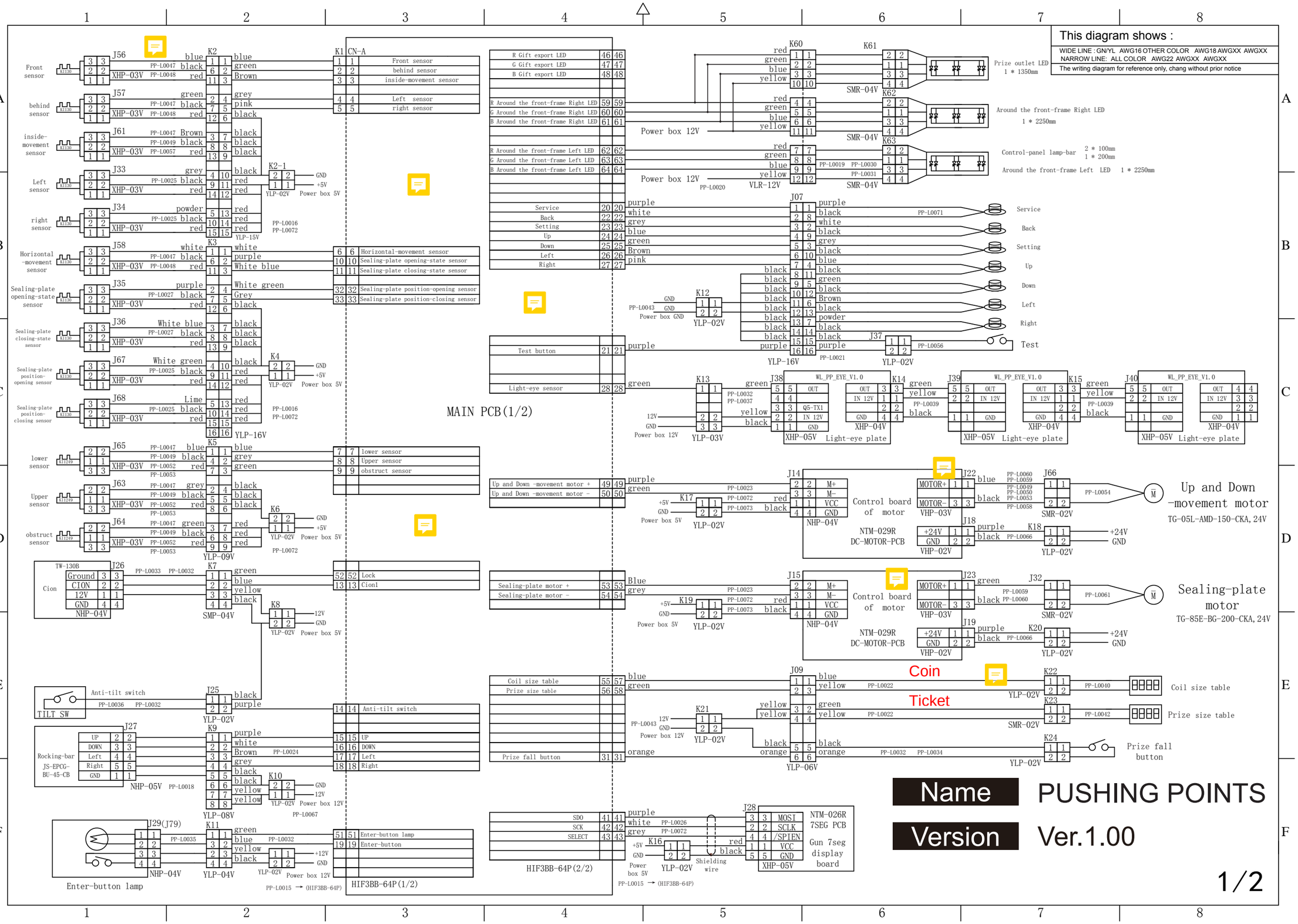
This diagram shows :
WIDE LINE : GN/YL AWG16 OTHER COLOR AWG18 AWGXX AWGXX
NARROW LINE: ALL COLOR AWG22 AWGXX AWGXX
The writing diagram for reference only, chang without prior notice
Front sensor
behind sensor
inside-movement sensor
Left sensor
right sensor
Horizontal-movement sensor
Sealing-plate opening-state sensor
Sealing-plate closing-state sensor
Sealing-plate position-opening sensor
Sealing-plate position-closing sensor
lower sensor
Upper sensor
obstruct sensor
Front sensor
behind sensor
inside-movement sensor
Left sensor
right sensor
Horizontal-movement sensor
Sealing-plate opening-state sensor
Sealing-plate closing-state sensor
Sealing-plate position-opening sensor
Sealing-plate position-closing sensor
lower sensor
Upper sensor
obstruct sensor
Lock
Cion
Anti-tilt switch
UP
DOWN
Left
Right
Enter-button lamp
Enter-button
Prize outlet LED
1 * 1350mm
Around the front-frame Right LED
1 * 2250mm
Control-panel lamp-bar 2 * 100mm
1 * 200mm
Around the front-frame Left LED 1 * 2250mm
Service
Back
Setting
Up
Down
Left
Right
Test
Up and Down -movement motor
TG-05L-AMD-150-CKA, 24V
Sealing-plate motor
TG-85E-BG-200-CKA, 24V
Coin
Ticket
Coil size table
Prize size table
Prize fall button
Name
PUSHING POINTS
Version
Ver.1.00
1/2

This diagram shows :

WIDE LINE : GN/YL AWG16 OTHER COLOR AWG18 AWGXX AWGXX
NARROW LINE: ALL COLOR AWG22 AWGXX AWGXX
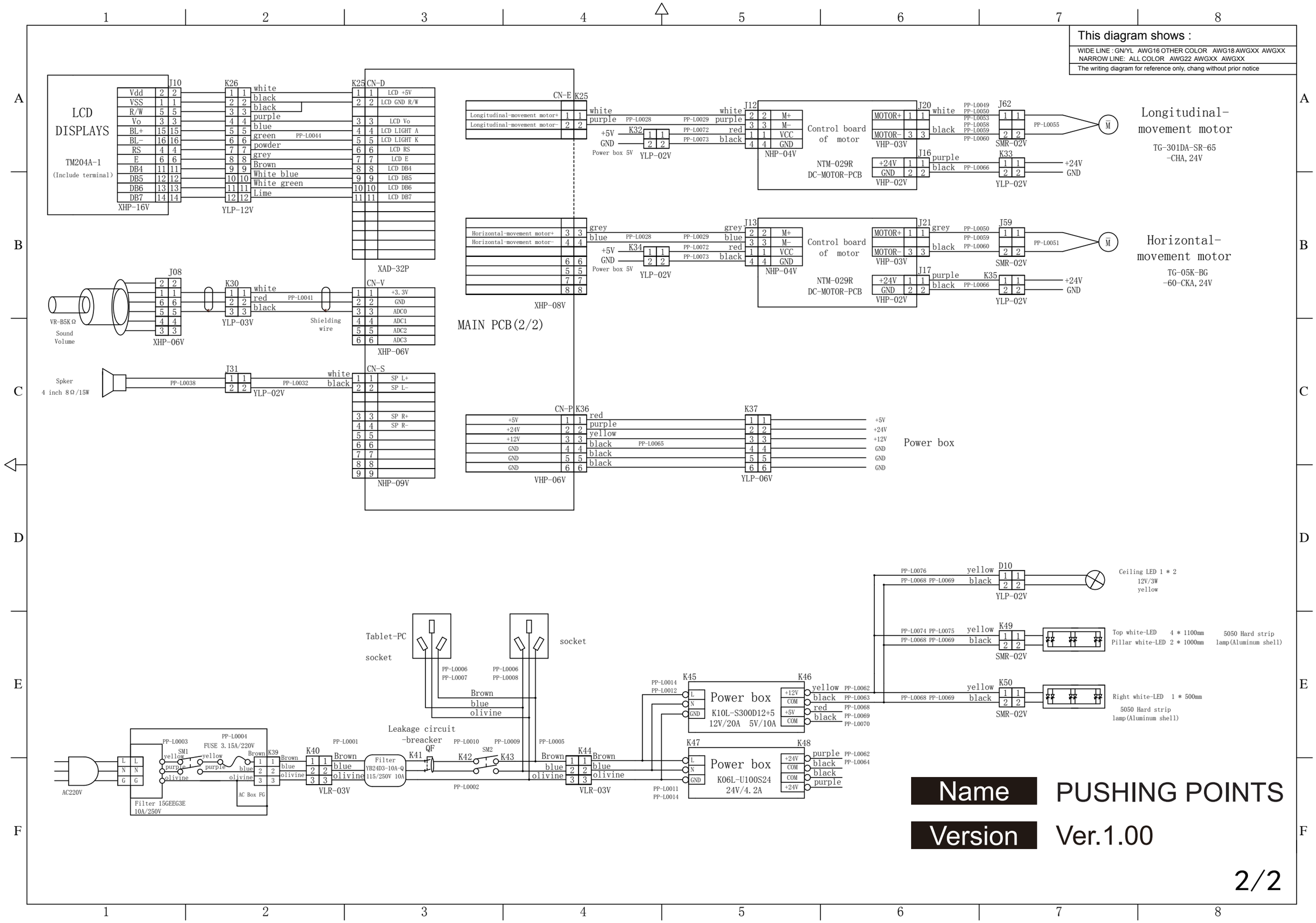
The writing diagram for reference only, chang without prior notice